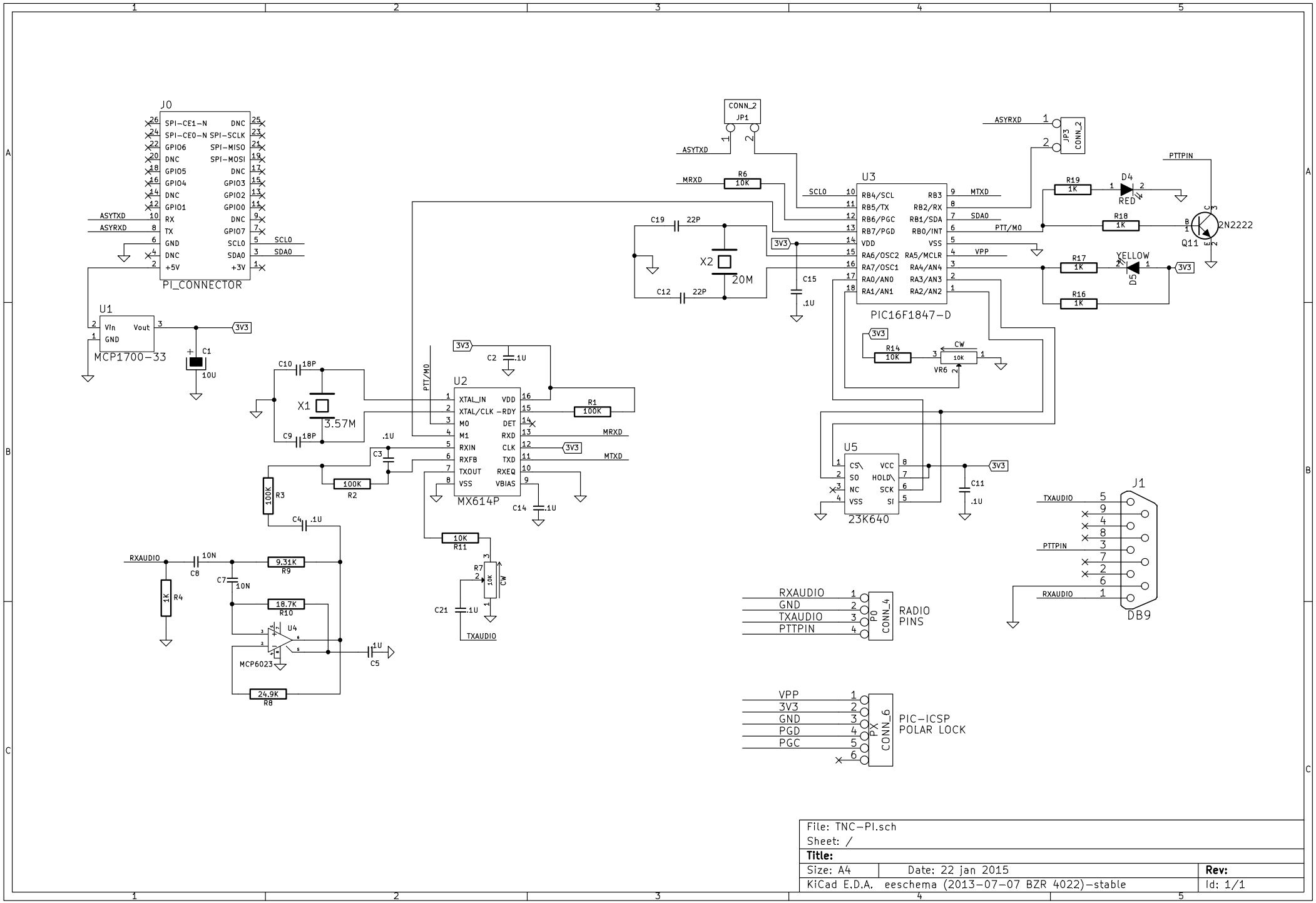


| | | |
|---|---|---|
| File: TNC-PI.sch | | |
| Sheet: / | | |
| **Title:** | | |
| Size: A4 | Date: 22 jan 2015 | **Rev:** |
| KiCad E.D.A. eeschema (2013-07-07 BZR 4022)-stable | | Id: 1/1 |